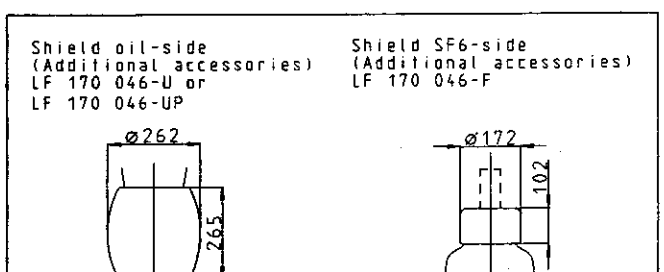

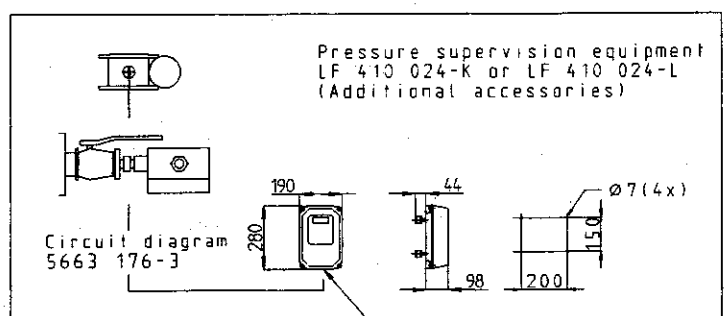

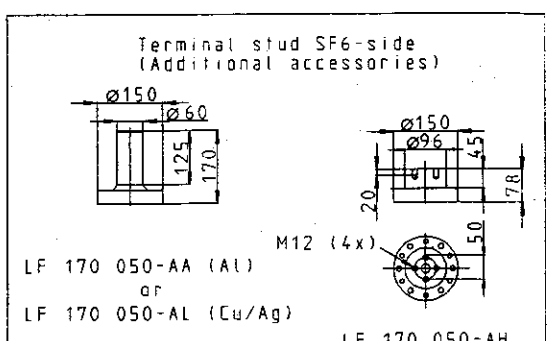

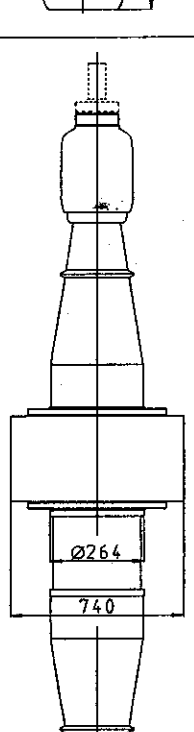

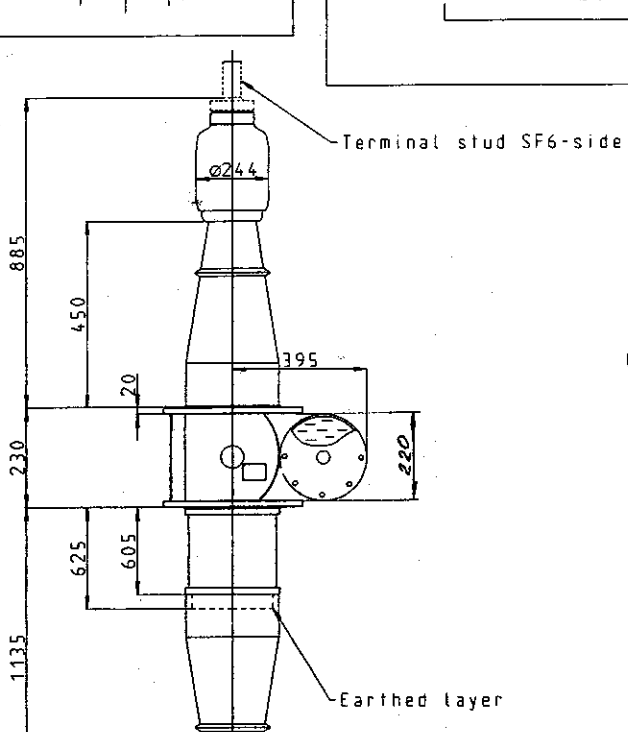

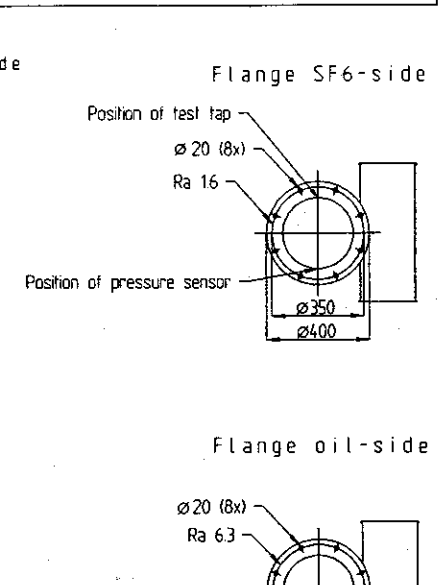

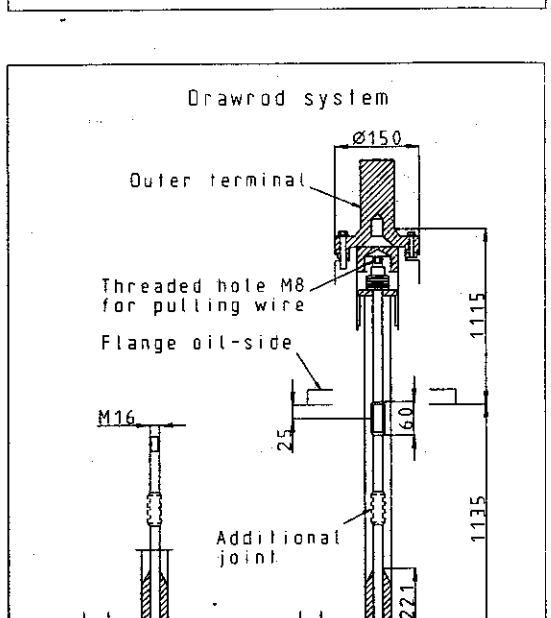

Catalogue number: LF 124 001-C

Electrical data		
Ratings	Rated voltage	245 kV
	Max.phase to ground	170 kV
	Rated current Vertical	2500 A
	Rated current Horizontal	1600 A
Test voltages	Lighting impulse	1050 kV
	Switching impulse	850 kV
Routine test	Power frequency	460 kV

ABB Components AB

Bushing GOEK 1050

No.	Horiz.1600 A
Un/Uy 245/170 kV	Vert.2500 A
Test LI/SI/AC	1050/850/460 kV
Year	L 1135 mm M 200 kg
PF	%C1/C2 pF

Rev Ind	Revision	Appd	Year	Week
1	220 added		99	41

Accepted by qual	Accepted for prod by	Description (English) GOEK 1050 FE=600	DATAORIGINAL
Design checked by Heyman	Drawn by Andersson	Description (own language)	File name
Drawing checked by Jonsson	Issued by Year Week GOM/BK 94 31	2753 015-23	Lang Sheet 1
ABB Components			Rev Cont -

Drawn by Form No. | Design checked by | Dept | Year | Sheet | Cont

We reserve all rights in this document and in the information contained therein. Reproduction, use or disclosure to third parties without express authority is strictly forbidden. © ABB 19